LD30CNBI10BPxxIO - IO-Link

Photoelectric Time Of Flight Sensors with IO-Link communication

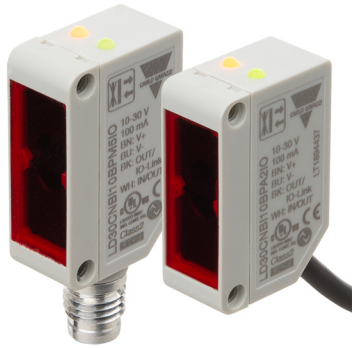

Description

The LD30CNBI10BPxxIO sensor family comes in a compact 10 x 30 x 20 mm ABS housing.
They are designed for use in applications where high-accuracy detection as well as small size is required.
Compact housing and high power LED for excellent performance-size ratio.
The compact sensor design is ideally suited to confined spaces.

Benefits

- **Long range Background suppression** TOF (Time of Flight) sensor with IO-Link with a adjustable distance of 50 to 1.000 mm, either by potentiometer or via IO-Link.
- **Infrared laser class 1** assure a reliable detection.
- **Easy customization** to specific OEM requests by use of the build in IO-Link functionalities.
- **The output can be operated** either as a standard switching output or in IO-Link mode.
- **Fully configurable via output IO-Link v 1.1.** Electrical outputs can be configured as PNP / NPN / Push-Pull / External input, normally open or normally closed.
- **Timer functions** can be set, such as ON-delay, Off-delay, and one shots.
- **Logging functions:** Temperatures, detecting counter, power cycles and operating hours.
- **Detection modes** Single point, two point and windows mode.
- **Logic functions:** AND, OR, XOR and Gated SR-FF.
- **Analogue output:** In IO-Link mode the sensor will generate 16 bit analogue process data output representing the distance to the object.
- IO-Link
- LASER 1

Applications

- The sensor has multiple detects functions e.g. in single point mode the presence or absence of objects are detected while cutting off the background information.
- The detection distance is very independent of the colour of the objects to be detected.
- The “analogue” distance from the sensor to the object is available via the IO-Link communication.

Main functions

- The sensor can be operated in IO-Link mode once connected to an IO-Link master or in standard I/O mode.
- Adjustable parameters via IO-Link interface:
  - Sensing distance and hysteresis.
  - Sensing modes: single point or two point or window mode.
  - Timer functions, e.g.: On-delay, Off delay, One shot leading edge or trailing edge.
  - Logic functions such as: AND, OR, X-OR and SR-FF.
  - External input.
  - Logging functions: Maximum temperatures, minimum temperatures, operating hours, operating cycles, power cycles, minutes above maximum temperature, minutes below minimum temperature, etc.
  - Auto hysteresis

References

Product selection key

LD30CNBI10BP ☐ IO

Enter the code option instead of ☐

Code	Option	Description
L	-	Sensing principle: Photoelectric sensor
D	-	Rectangular housing
30	-	Length of housing
C	-	Plastic housing
N	-	Back trimmer
B	-	Diffuse reflective, Background suppression
I	-	infrared light
10	-	Sensing distance: 1000 mm
B	-	**Selectable functions:** NPN, PNP, Push-Pull, External Input (only pin 2) or External teach input (only pin 2)
P	-	**Selectable:** N.O. or N.C.
☐	A2	Cable, 2 m
	M5	Connector M8
IO	-	IO-Link version

Type selection

Connec-tion	Housing	Code
Cable	Plastic housing	**LD30CNBI10BPA2IO**
Plug	Plastic housing	**LD30CNBI10BPM5IO**

Structure

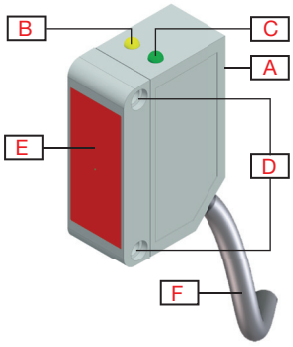

Fig. 1 *Cable*

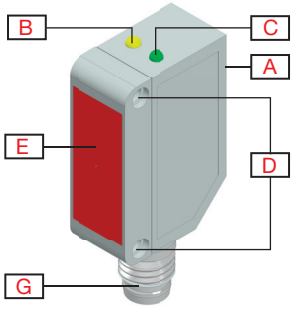

Fig. 2 *Plug*

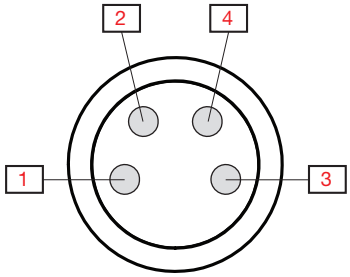

Fig. 3 *"M8-plug" Pin numbers*

A	Sensitivity adjustment (|Back trimmer)	**G**	M8, 4-pin male connector
B	Yellow LED	**1**	Brown
C	Green LED	**2**	White
D	M3 Fixing holes for sensor mounting	**3**	Blue
E	Sensing window	**4**	Black
F	2 m, 4 wire PVC Ø 3.3 mm cable		

Sensing

Detection

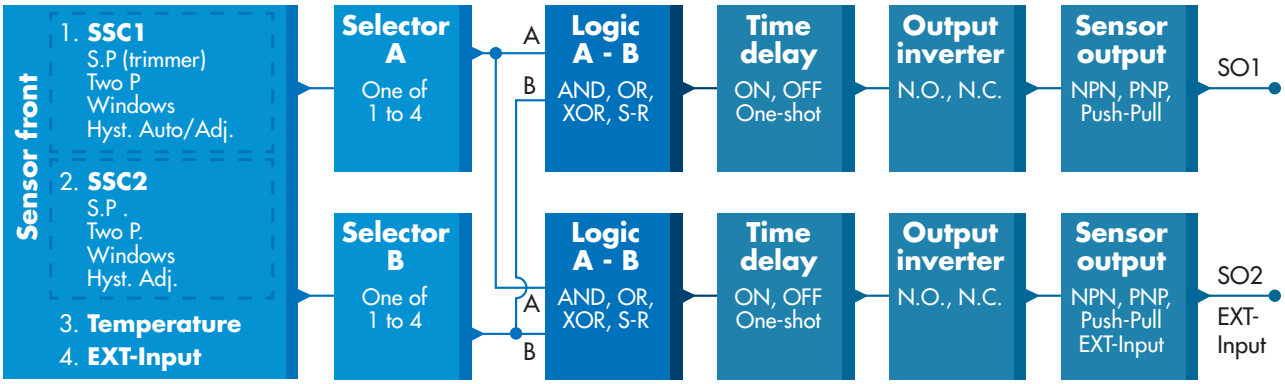

Sensor switching channel SSC1 and SSC2	**SSC1** • Enabled • Disabled ***Factory settings:*** *Enabled*	**SSC2** • Enabled • Disabled ***Factory settings:*** *Enabled*
Switching mode	**SSC1** • Deactivated • Single point mode • Two point mode • Windows mode ***Factory settings:*** *Single point mode*	**SSC2** • Deactivated • Single point mode • Two point mode • Windows mode ***Factory settings:*** *Single point mode*
Rated operating distance (S_n)	1000 mm	Reference target, white paper with 90 % reflectivity, Size 200x200 mm
Maximum detection distance	< 1000 mm	White object 90% reflection
	< 1000 mm	Grey object 18% reflection
	< 1000 mm	Black object 6% reflection
Sensitivity control	Adjustable by potentiometer, external teach or by IO-Link settings • Potentiometer disabled (SSC1) • Potentiometer enabled (SSC1) • External teach ***Factory settings:*** *Potentiometer enabled*	
Sensitivity adjustment	50 mm ... 1000 mm	Single-turn potentiometer
	210°	Electrical adjustment
	240°	Mechanical adjustment
Blind zone	0 mm	White object 90% reflection
	0 mm	Grey object 18% reflection
	0 mm	Black object 6% reflection
Light source	940 nm	Infrared
Light type	Laser modulated	
Laser class	1	
Detection angle	± 1.2°	@1000 mm
Light spot size	Ø 18 mm	@500 mm (|approximation)
Emitter beam angle	± 1.1°	@500 mm
Adjustable distance	50-1000 mm ***Factory settings:*** *SP1 1000 and SP2 750*	White object 90% reflection
	50-1000 mm ***Factory settings:*** *SP1 1000 and SP2 750*	Grey object 18% reflection
	50-1000 mm ***Factory settings:*** *SP1 1000 and SP2 750*	Black object 6% reflection
Hysteresis (H) **Manual** **Automatic**	Adjustable by IO-Link 5 - 2000 mm (default 50 mm) ≤10% @ Sn (On all objects)	
Detection filter	This function can increase the immunity towards unstable targets and electromagnetic disturbances: Value can be set from 1 to 255. ***Factory settings:*** *1* (1 is max. operating frequency and 255 is min. operating frequency)	

Alarm settings

Temperature alarm	• High threshold -50 to +150 °C • Low threshold -50 to +150 °C ***Factory settings:*** *High value 70 °C* *Low value -20 °C*

Detection diagram

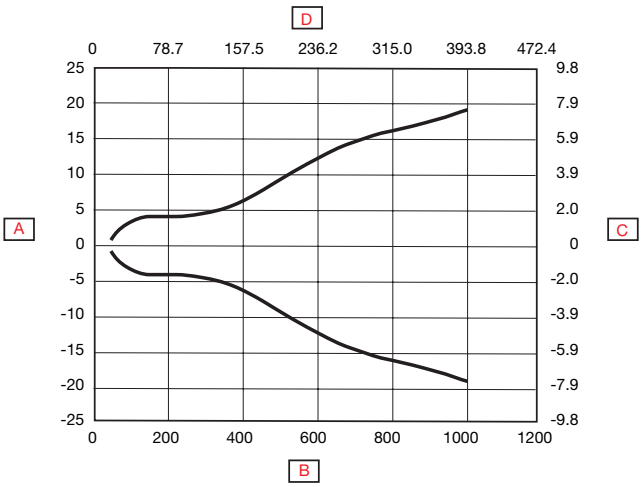

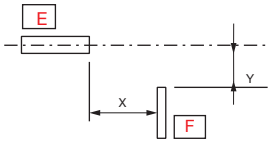

A	Detection width (mm)	**D**	Sensing range (inches)
B	Sensing range (mm)	**E**	Sensor
C	Detection width (inches)	**F**	Object 25 x 25 mm, White 90%

Accuracy

Temperature drift	≤ 0.05%/ºC

Sensing conditions

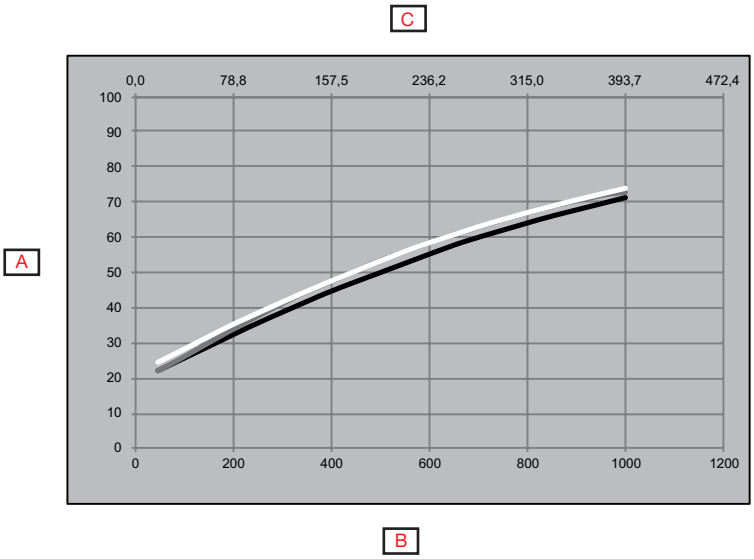

A	Distance from background (mm)		(Black on white 6%/90%)
B	White background 90% (mm)		(Grey on white 18%/90%)
C	White background 90% (inches]		(White on white 90%/90%)

Features

Power Supply

Rated operational voltage (U_B)	10 ... 30 VDC (ripple included)
Ripple (U_{rpp})	≤ 10%
No load supply current (I_o)	≤ 25 mA @ U_B min.
	≤ 12 mA @ U_B max.
Power-ON delay (t_v)	≤ 300 ms

Input selector

Input selector	**Channel A** • Deactivated • SSC1 • SSC2 • Temperature alarm • External input ***Factory settings:*** *SSC1*	**Channel B** • Deactivated • SSC1 • SSC2 • Temperature alarm • External input ***Factory settings:*** *SSC1*

Logic functions

Logic functions	**Channel A + B for SO1** • Direct • AND • OR • X-OR • SR-FF ***Factory settings:*** *Direct*	**Channel A + B for SO2** • Direct • AND • OR • X-OR • SR-FF ***Factory settings:*** *Direct*

Time delays

Timer mode	**For SO1** • Disabled • Power-ON delay • Power-OFF delay • Power-ON delay and Power-OFF delay • One-shot leading edge • One-shot trailing edge ***Factory settings:*** *Disabled*	**For SO2** • Disabled • Power-ON delay • Power-OFF delay • Power-ON delay and Power-OFF delay • One-shot leading edge • One-shot trailing edge ***Factory settings:*** *Disabled*
Timer scale	**For SO1** • [ms] • [s] • [min] ***Factory settings:*** *ms*	**For SO2** • [ms] • [s] • [min] ***Factory settings:*** *ms*
Timer value	**For SO1** • 0 ... 32 767 ***Factory settings:*** *0*	**For SO2** • 0 ... 32 767 ***Factory settings:*** *0*

Output Inverter

Output Inverter	**For SO1 Pin 4 Black wire:** • N.O. • N.C. ***Factory settings:*** *N.O.*	**For SO2 Pin 2 White wire:** • N.O. • N.C. ***Factory settings:*** *N.C.*

Sensor Output

Switching Output Stage SO1 and SO2	**For SO1 Pin 4 Black wire:** • NPN • PNP • Push-Pull ***Factory settings:*** *PNP*	**For SO2 Pin 2 White wire:** • NPN • PNP • Push-Pull • External input, active high • External input, active low • External teach ***Factory settings:*** *PNP*

Outputs

Rated operational current (I_e)	≤ 100 mA from -25 ... 40°C (SO1 + SO2) 50 mA @ ≥40°C (SO1 + SO2)	
OFF-state current (I_r)	≤ 100 µA	
Minimum operational current (I_m)	> 0,5 mA	
Voltage drop (U_d)	≤ 1.0 VDC @ 100 mA DC	
Protection	Short circuit, reverse polarity, transients	
Utilization category	DC-12	Control of resistive loads and solid-state loads with optical isolation
	DC-13	Control of electromagnets
Capacitive load	100 nF @ 100 mA	

Operation diagram

For default factory sensor

Tv = Power-ON delay

Power supply	ON	
Target (Object)	Present	
Break output (N.C.)	ON	
Make output (N.O.)	ON	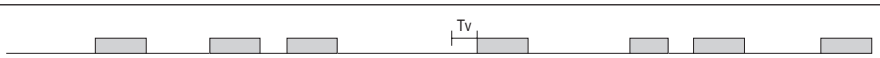

Response times

Operating frequency (f)	≤ 5 Hz	
Response times	≤ 100 ms	OFF-ON (t_{ON})
	≤ 100 ms	ON-OFF (t_{ON})

Indication

Green LED	Yellow LED	Power	Function
SIO and IO-Link mode			
ON	ON	ON	ON (stable)* SSC1
ON	OFF	ON	OFF (stable)* SSC1
OFF	ON	-	ON (Not stable) SSC1
OFF	OFF	-	OFF (Not stable) SSC1
-	Flashing 10Hz 50% dutycycle	ON	Output short-circuit
-	Flashing (0.5…20Hz)	ON	Timer indication
SIO mode only			
-	Flashing 1 HZ ON 100 mS OFF 900 mS	ON	External teach by wire. Only for single point mode
-	Flashing 1 HZ ON 900 mS OFF 100 mS	ON	Teach time window (3 - 6 sec)
-	Flashing 10 HZ ON 50 mS OFF 50 mS Flashing for 2 sec	ON	Teach time out (12 sec)
-	Flashing 2 HZ ON 250 mS OFF 250 mS Flashing for 2 sec	ON	Teach successful
IO-Link mode only			
Flashing 1 HZ ON 900 mS OFF 100 mS	-	ON	Sensor is in IO-Link mode
Flashing 2Hz 50% dutycycle		ON	Find my sensor

**See operation diagram*

LED indication

LED indications	• LED Indication disabled • LED Indication enabled • Find my sensor ***Factory settings:*** *LED Indication enabled*

Environmental

Ambient temperature	-25°... +50°C (-13°... +122°F)	Operating [1]
	-40° ... +70°C (-40° ... +158°F)	Storage [1]
Ambient light	≤ 50 000 lux (indirect) @ <5°	@ 3000 … 3200 °K
	≤ 5 000 lux (direct) @ <5°	
Vibration	10 ...150 Hz, 1.0 mm/15 g	EN 60068-2-6
Shock	30 g_n / 11ms, 6 pos, 6 neg per axis	EN60068-2-27
Drop test	2 x 1 m and 100 x 0.5 m	EN 60068-2-31
Rated insulation voltage (U_i)	50 VDC	
Dielectric insulation voltage	≥ 500 VAC rms	50/60 Hz for 1 min.
Rated impulse withstand voltage	1 kV	1.2/50 µs
Pollution degree	3	EN60947-1
Overvoltage category	III	IEC60664; EN60947-1
Degree of protection	IP67	IEC60539; EN60947-1
NEMA Enclosure Types	1	NEMA 250
Ambient humidity range	35% ... 95%	Operating [2]
	35% ... 95%	Storage [2]

[1] *Do not bend the cable in temperatures below -10°C*
[2] *With no icing or condensation*

EMC

Electrostatic discharge immunity test	± 8 kV @ air discharge or ± 4 kV @ contact discharge	IEC 61000-4-2
Radiated radio-frequency electromagnetic field immunity test (80 MHz ... 1 GHz and 1..4 GHz ... 2 GHz)	10 V/m	IEC 61000-4-3
Electrical fast transient/Burst immunity test	±2 kV / 5 kHz using the capacitive coupling clamp	IEC 61000-4-4
Conducted disturbances induced by radio-frequency fields immunity test (150 kHz ... 80 MHz)	10 Vrms	IEC 61000-4-6
Power frequency magnetic field immunity test	30 A/m 38 µT	IEC 61000-4-8

Diagnostic parameters

Function	Unit	Range
Values stored in the sensor (Saved every hour)		
Operating Hours	[h]	0 … 2 147 483 647
Number of Power Cycles	[cycles]	0 … 2 147 483 647
Maximum temperature - All time high	[°C]	-50 ... +150
Minimum temperature - All time low	[°C]	-50 ... +150
Detection counter SSC1	[cycles]	0 … 2 147 483 647
Minutes above Maximum Temperature	[min]	0 … 2 147 483 647
Minutes below Minimum Temperature	[min]	0 … 2 147 483 647
Values stored in the sensor (Saved with events)		
Download counter	[counts]	0 …65 536
Values not saved in sensor		
Maximum temperature - Since last power-up	[°C]	-50 ... +150
Minimum temperature - Since last power-up	[°C]	-50 ... +150
Current temperature	[°C]	-50 ... +150

Events Configuration

Events	Factory default setting
Temperature fault event	Inactive
Temperature over-run	Inactive
Temperature under-run	Inactive
Short circuit	Inactive

Process data configuration

Process Data	Factory default setting
Analogue value	Active
SO1, Switching output 1	Active
SO2, Switching output 2	Active
SSC1, Sensor switching channel 1	Inactive
SSC2, Sensor switching channel 2	Inactive
TA, Temperature alarm	Inactive
SC, Short circuit	Inactive

Process data structure

4 Bytes, Analogue value 16 ... 31 (16 bit)

Byte 0	31	30	29	28	27	26	25	24
	MSB	-	-	-	-	-	-	-
Byte 1	23	22	21	20	19	18	17	16
	-	-	-	-	-	-	-	**LSB**
Byte 2	15	14	13	12	11	10	9	8
	-	-	-	-	**SC**	**TA**	**SSC2**	**SSC1**
Byte 3	7	6	5	4	3	2	1	0
	-	-	-	-	-	-	**SO2**	**SO1**

Mechanics/electronics

Connection

Cable	2 m, 4-wire 4 x 0.14 mm², Ø = 3.3 mm, PVC, Black
Plug	M8, 4-pin, male

Wiring

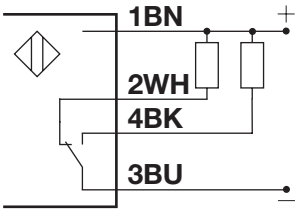

Fig. 4 *NPN*

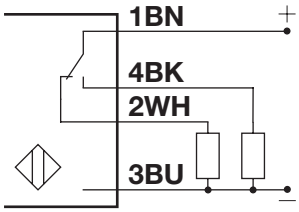

Fig. 5 *PNP*

BN	WH	BK	BU
Brown	White	Black	Blue

Housing

Body	ABS	
Front glass	PMMA, Red	
Trimmer shaft	POM, Grey	
Indication	TPU, Transparent	
Sealing	NBR70	
Dimensions	10.8 x 30 x 20 mm	
Weight	≤ 50 g	Cable version
	≤ 20 g	Plug version

Dimensions

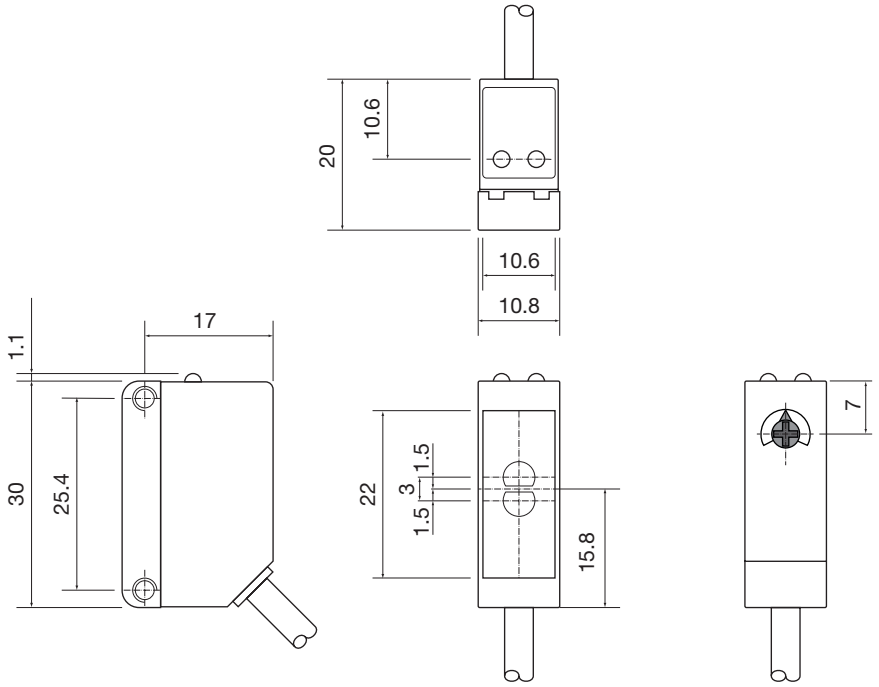

Fig. 6 *Cable*

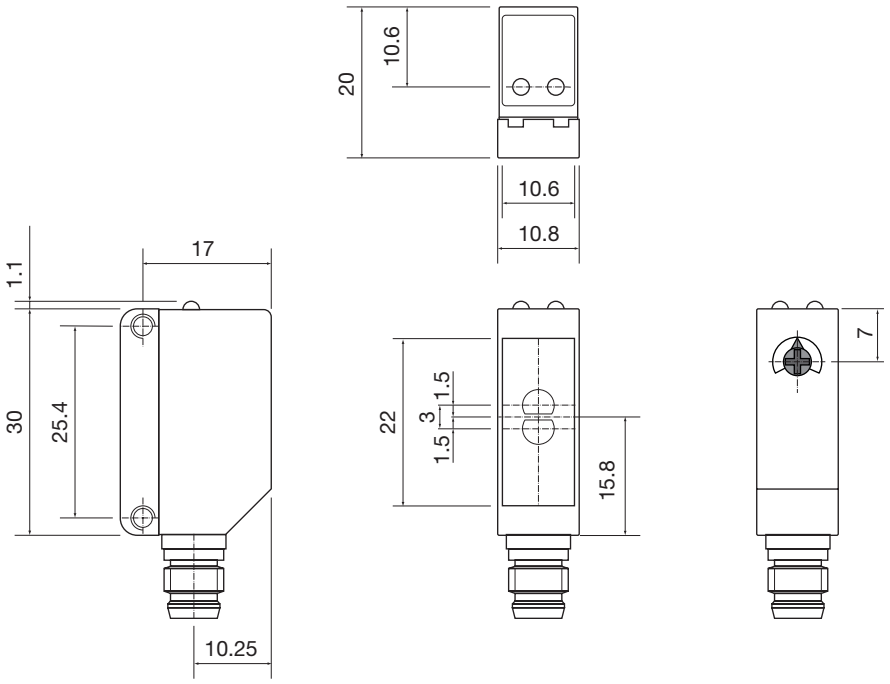

Fig. 7 *Plug*

Compatibility and conformity

Approvals and markings

General reference	Sensor designed according to EN60947-5-2	
$MTTF_d$	132.2 years @ 40°C (+104°F)	ISO 13849-1, SN 29500
CE-marking	CE	
Approvals	c UL us (UL508 + C22.2)	
Other Approvals	LASER 1	Class 1 laser according to IEC 60825-1:2014 Complies with IEC / EN 60825-1:2014 and 21 CFR 1040.10 1040.11 except for deviations pursuant to Laser Notice No. 56, dated January 19, 2018

IO-Link

IO-Link revision	1.1
Transmission rate	COM2 (38.4 kbaud)
SDCI-Norm	IEC 61131-9
Profile	Smart sensor profile 2nd edition, common profile
Min. cycle time	5 ms
SIO mode	Yes
Min. master port class	A (4-pin)
Process data length	32 bit

Delivery contents and accessories

Delivery contents

- Photoelectric switch: LD30CNBI10BPxxIO
- Screwdriver
- Packaging: Carton box

Accessories

- Mounting bracket: APD30-MB2 to be purchased separately
- Connector type: CO..54NF... series to be purchased separately

Further information

Information	Where to find it	QR
IO-Link manual	http://www.gavazziautomation.com/images/PIM/MANUALS/ENG/MAN_LD30xxBI10_IO-Link_MUL.pdf	
Mounting brackets	http://www.productselection.net/Pdf/UK/Mounting_bracket.pdf	
Connectors	http://gavazziautomation.com/images/PIM/DATASHEET/ENG/CONB54NF-A2W_EN.pdf	

COPYRIGHT ©2019
Content subject to change. Download the PDF: www.productselection.net